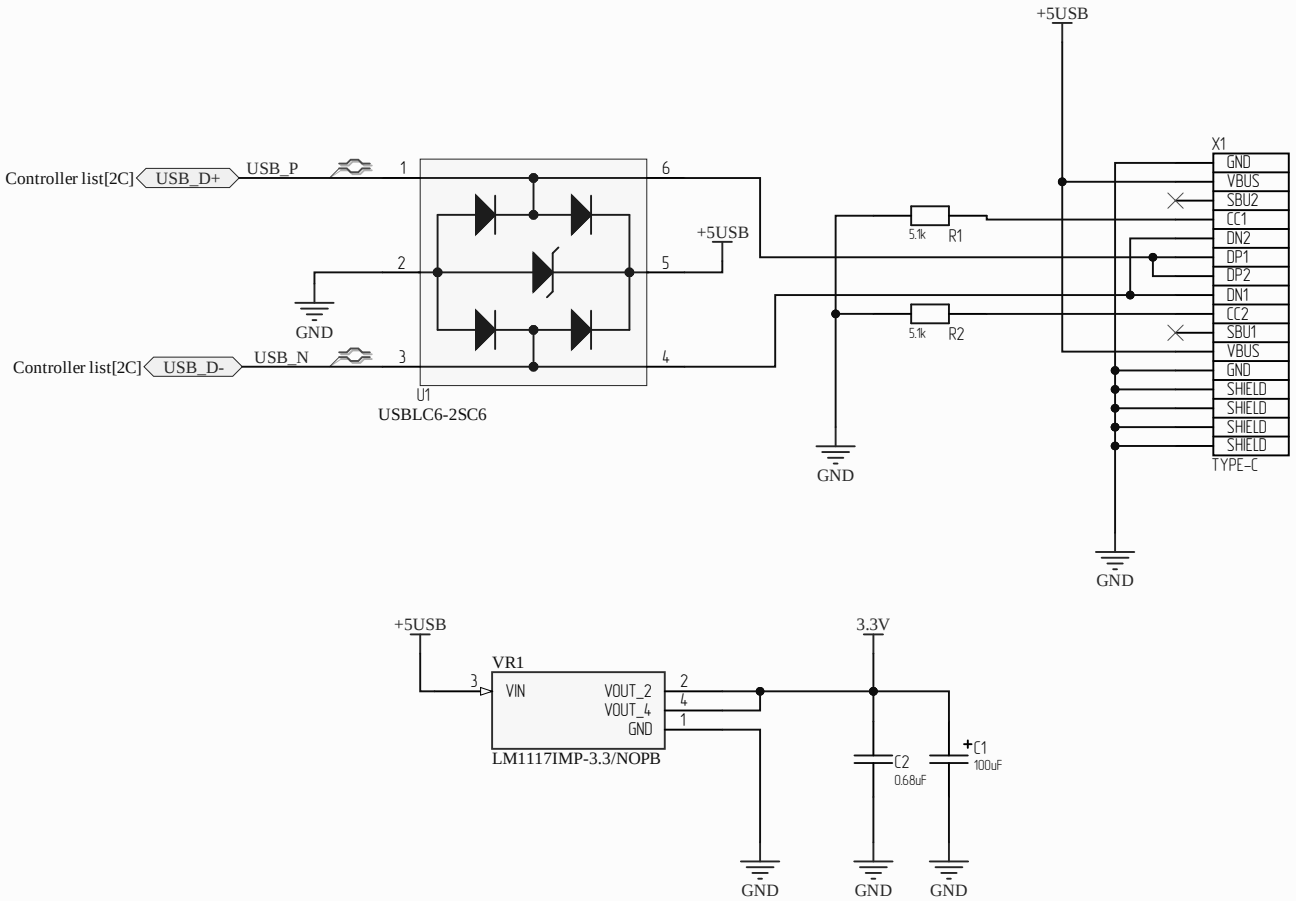

Title		
Size A4	Number	Revision
Date: 3.09.2026		Sheet of
File: C:\Users\..\USB-C list.SchDoc		Drawn By:

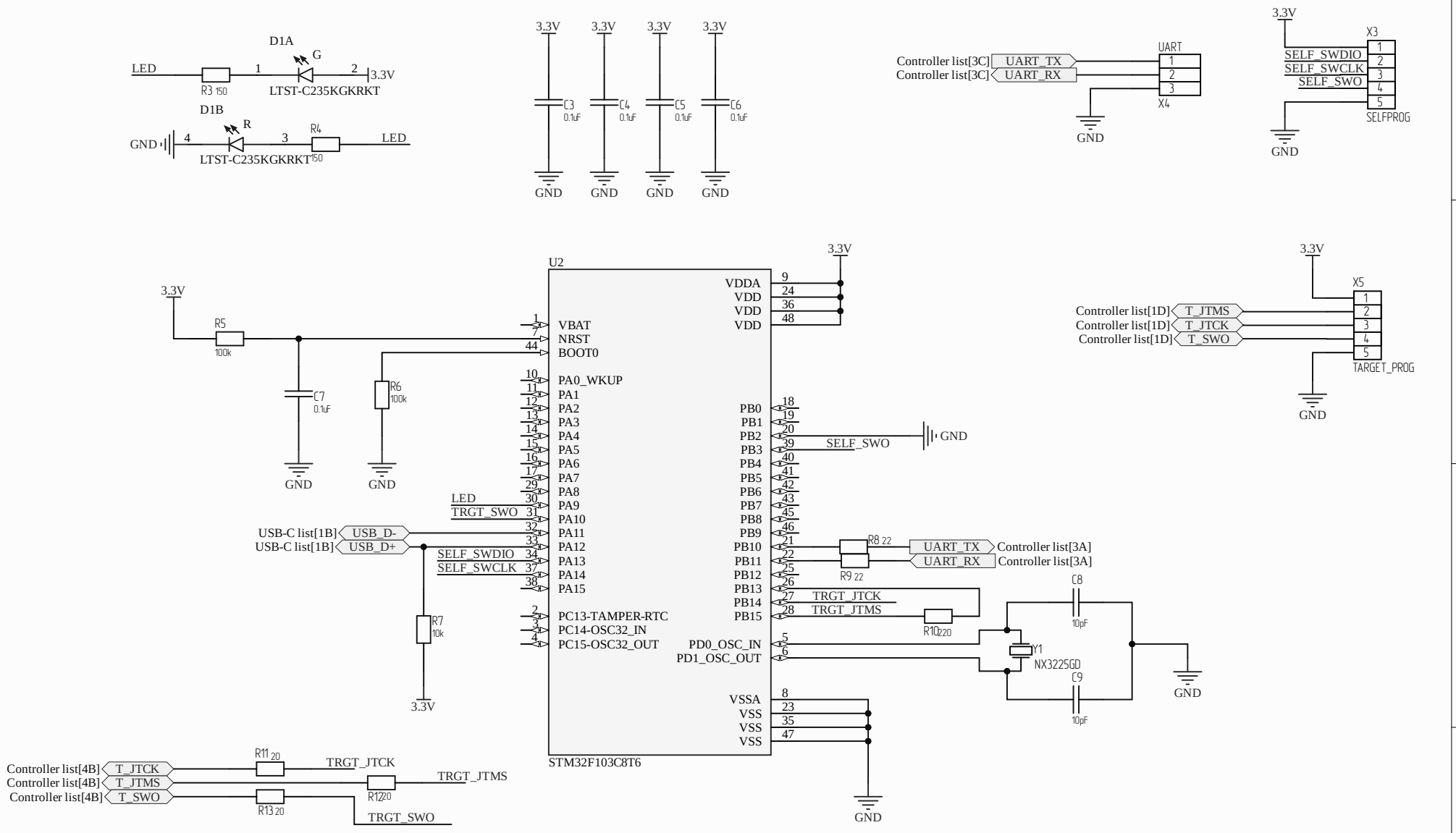

Title		
Size A4	Number	Revision
Date: 3.09.2026		Sheet of
File: C:\Users\..\Controller list.SchDoc		Drawn By: